TOSOT

Submittal Data: **TW12HQ2A1D**

12,000 Btu/h Wall Mounted Heat Pump System

Job Name	Location Date
Purchaser	Engineer
Submitted To	For ☐ Reference ☐ Approval ☐ Construction
Unit Designation	Schedule No.

GENERAL FEATURES

-Compact and Quiet Design
-High Efficiency DC Inverter Technology
-Vertical Swing Louver
-Wireless Remote with LCD Display
-Wired Controller (Sold Separately)
-Low Ambient Cool to 0 deg F
-Gold Fin Condenser Coil

System Ratings

Cooling		
Rated Capacity		12,000 Btu/h
Capacity Range		3,100-13,000 Btu/h
Power Input (Max)		1,350 W
SEER		22.0
EER		12.5
Heating at 47° F		
Rated Capacity		13,000 Btu/h
Capacity Range		2,400-14,000 Btu/h
Power Input (Max)		1,400 W
HSPF		10.1
COP		3.5
Heating at 17° F		
Rated Capacity		8,334 Btu/h
Operating Range		
Cooling	(Max)	115°F (46 C)
	(Min)	0°F (-18 C)
Heating	(Max)	75°F (24 C)
	(Min)	-4°F (-20 C)

Refrigerant Piping Data

Gas Pipe Size (OD)	1/2-in
Liquid Pipe Size (OD)	1/4-in
Connection Method	Flared
MAX Refrigerant Pipe Length	66-ft
MIN Refrigerant Pipe Length	10-ft
MAX Refrigerant Pipe Elevation	33-ft

Indoor Unit Data

Fan Motor	Type	Cross-Flow
	Output Power	20 W
	FLA	0.1 A
Airflow		
Cooling Wet (Lo/Hi)		171/400 CFM
Heating Dry (Lo/Hi)		171/400 CFM
Sound Pressure Level		
Cooling (Min/Max)		29/45 db(A)
Heating (Min/Max)		29/45 db(A)
Dehumidification		2.96 pt/hr

Outdoor Unit Data

Compressor	Type	DC Inverter Driven Rotary
	RLA	4.0 A
Refrigerant Type		R410A
Fan Motor	Output Power	30 W
	FLA	0.36 A
Sound Pressure		
Cooling/Heating		54/54 db(A)
Power Supply		
Normal Operational Voltage		208/230 V, 1 Phase, 60 Hz
Voltage Range		187 - 253 V
MCA		9.0 A
MOCP/Breaker Size		15 A

INVERTER R410A AHRI CERTIFIED ETL

EXTENDED RATINGS **TW12HQ2A1D**

COOLING PERFORMANCE (Btu/h)*

Outdoor Ambient DB	Indoor Ambient Temperature							
	68F DB (20C)		73F DB (23C)		80F DB (27C)		82F DB (28C)	
	57F WB (14C)		61F WB (16C)		67F WB (19C)		68F WB (20C)	
	TC	SHC	TC	SHC	TC	SHC	TC	SHC
5°F	7,656	6,005	8,088	6,341	9,128	7,159	9,508	7,458
14°F	7,852	6,159	8,292	6,503	9,476	7,431	9,871	7,740
23°F	8,388	6,580	8,972	7,038	10,280	8,063	10,708	8,399
32°F	10,172	7,978	10,880	8,533	11,916	9,343	12,413	9,732
41°F	11,520	9,035	12,240	9,598	13,080	10,259	13,625	10,686
50°F	11,384	8,930	12,108	9,497	12,960	10,166	13,500	10,589
59°F	11,104	8,707	11,824	9,274	12,840	10,072	13,375	10,492
68°F	10,824	8,488	11,544	9,055	12,600	9,882	13,125	10,294
77°F	10,548	8,273	11,264	8,833	12,360	9,696	12,875	10,100
86°F	10,244	8,034	10,960	8,594	12,000	9,412	12,500	9,804
95°F	9,996	7,840	10,708	8,399	11,844	9,290	12,338	9,678
104°F	9,748	7,645	10,460	8,205	11,688	9,169	12,175	9,551
113°F	9,248	7,252	9,960	7,812	11,192	8,776	11,658	9,142

HEATING PERFORMANCE (Btu/h)*

Outdoor Ambient DB	Indoor Ambient Temperature							
	68F DB (20C)		73F DB (23C)		80F DB (27C)		86F DB (30C)	
	57F WB (14C)		61F WB (16C)		67F WB (19C)		72F WB (22C)	
	TC	SHC	TC	SHC	TC	SHC	TC	SHC
-4°F	6,821	6,821	6,756	6,756	6,642	6,642	6,374	6,374
0°F	7,390	7,390	7,321	7,321	7,199	7,199	6,902	6,902
6°F	7,796	7,796	7,723	7,723	7,593	7,593	7,280	7,280
10°F	8,121	8,121	8,044	8,044	7,910	7,910	7,585	7,585
16°F	8,365	8,365	8,288	8,288	8,149	8,149	7,812	7,812
19°F	8,531	8,531	8,446	8,446	8,308	8,308	7,963	7,963
24°F	9,478	9,478	9,397	9,397	9,254	9,254	8,913	8,913
32°F	10,583	10,583	10,502	10,502	10,359	10,359	10,018	10,018
41°F	11,846	11,846	11,765	11,765	11,627	11,627	11,282	11,282
43°F	12,163	12,163	12,082	12,082	11,940	11,940	11,598	11,598
47°F	13,264	13,264	13,130	13,130	12,903	12,903	12,342	12,342
53°F	13,398	13,398	13,260	13,260	13,028	13,028	12,464	12,464
59°F	13,703	13,703	13,565	13,565	13,325	13,325	12,748	12,748
64°F	13,995	13,995	13,853	13,853	13,609	13,609	13,020	13,020
70°F	14,259	14,259	14,113	14,113	13,869	13,869	13,268	13,268
75°F	14,458	14,458	14,312	14,312	14,060	14,060	13,451	13,451

* Maximum system capacity

TC- Total Capacity (BtuH)

SHC- Sensible Capacity (BtuH)

MINIMUM SPACING REQUIREMENTS

Units: inch (mm)

INDOOR

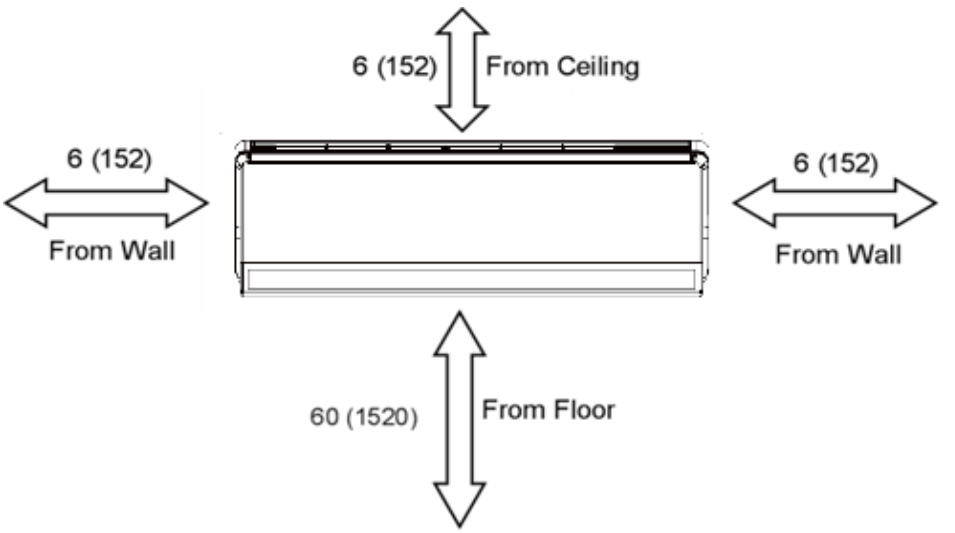

Units: inch (mm)

OUTDOOR

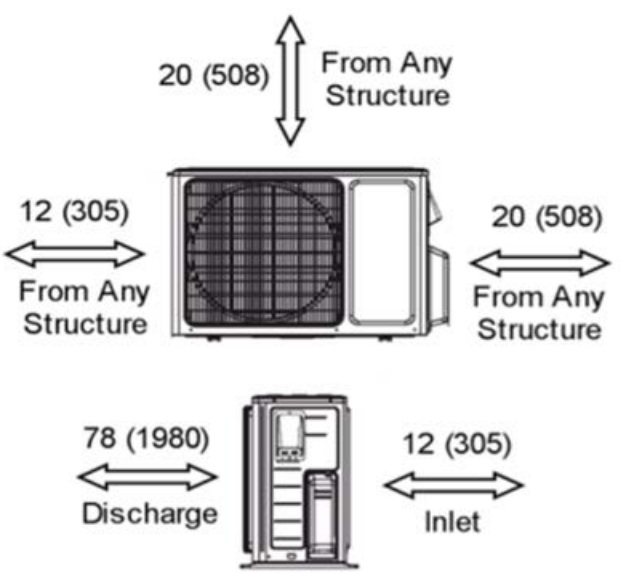

DIMENSIONAL SPECIFICATIONS TW12HQ2A1D

INDOOR UNIT DIMENSIONS

Units: inch

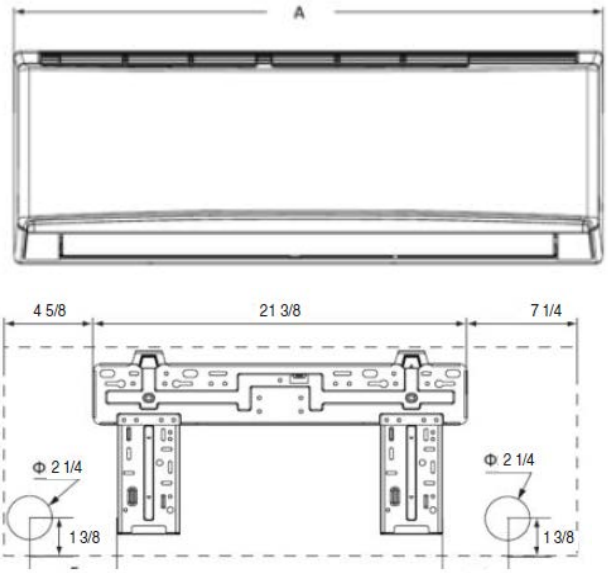

Dimensions	
A	33.4
B	11.4
C	8.2

Weight (Net/Gross) 22.1/26.5 lbs

Liquid Line Valve	1/4-in OD Flared
Gas Line Valve	1/2-in OD Flared
Drain Connector	5/8-in OD

OUTDOOR UNIT DIMENSIONS

Units: inch

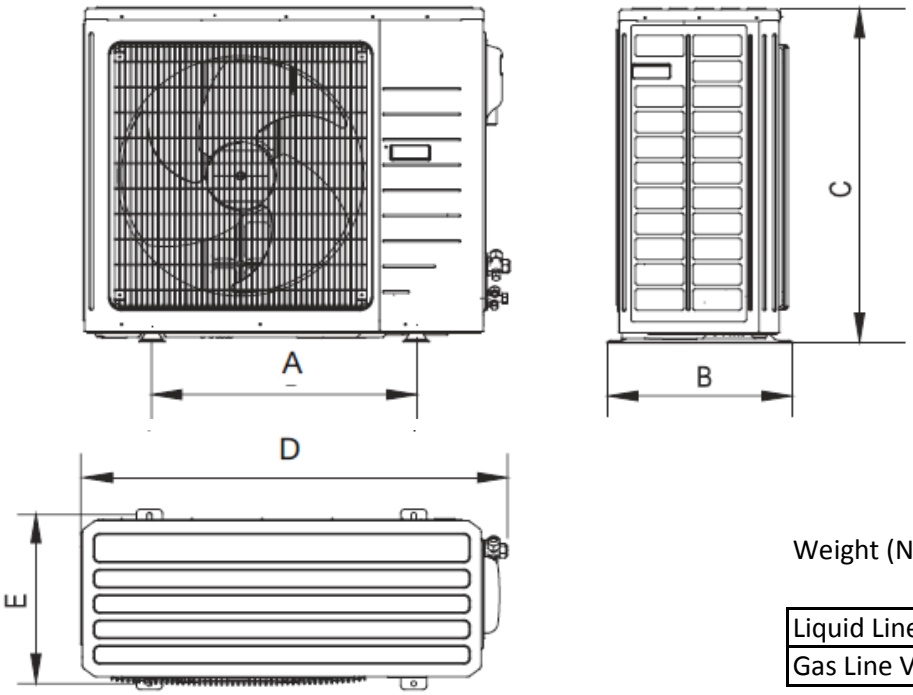

Dimensions	
A	21.3
B	11.3
C	21.3
D	33.4
D	12.6

Weight (Net/Gross) 86.0/93.0 lbs

Liquid Line Valve	1/4-in OD Flared
Gas Line Valve	1/2-in OD Flared

Notes:

1. Recommended Interconnecting Cable Type 14 AWG 4 Stranded Bare Copper Conductors THHN 600V Wire
2. Power wiring cable size must comply with applicable national and local codes.
3. Test conditions are based on AHRI 210/240.

Specifications are subject to change without notice. Manufacturer reserves the right to discontinue or modify specifications or designs without notice or without incurring obligations. All rights reserved.